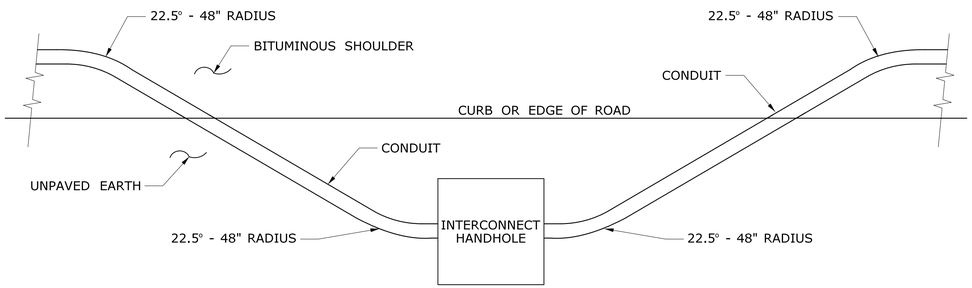

INTERCONNECT TYPICAL CURB CROSSING

NOTES:

1. RESTORE AREAS DISTURBED BY TRENCH TO ORIGINAL CONDITION.

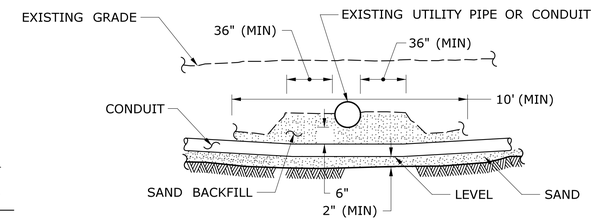

CROSSING UNDER EXISTING UTILITY

NOTES:

1. WHEN ENCOUNTERED AT APPROXIMATELY THE SAME DEPTH, CROSS BENEATH.
2. PROTECT & SUPPORT EXPOSED EXISTING UTILITY.

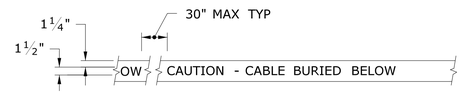

DETECTABLE WARNING TAPE

NOTE:

STANDARD SPECIFICATIONS, ARTICLE: 1.05.15

1. TAPE COLORS:
   COMMUNICATION - ORANGE BACKGROUND / BLACK LEGEND
   POWER - RED BACKGROUND / BLACK LEGEND

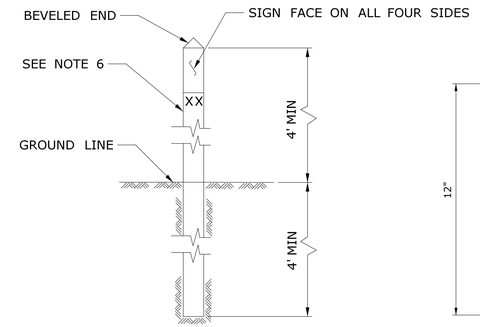

INTERCONNECT CONDUIT IDENTIFICATION POST

NOTES:

1. 4" x 4" NOMINAL, PRESSURE TREATED WOOD POST.
2. ATTACH SIGN TO POST WITH ¼" x 1¼" STAINLESS STEEL LAG SCREW WITH NYLON WASHER ON FACE OF SIGN.
3. SIGN COLORS: BACKGROUND - ORANGE (RETROREFLECTIVE)
   LEGEND - BLACK (OPAQUE).
4. INSTALL POST APPROX 24" FROM RMC IN VICINITY OF EACH INTERCONNECT HANDHOLE.
5. INSTALL ADDITIONAL POST(S) WHERE SPACING BETWEEN INTERCONNECT HANDHOLES IS GREATER THAN 1500' APART.
6. PERMANENTLY ATTACH STAINLESS STEEL NUMBERS INDICATING DISTANCE IN FEET TO TRENCH CONTAINING COMMUNICATION CABLE.
   ATTACH NUMBERS TO SIDE OF POST FACING CONDUIT.
7. IDENTIFICATION POSTS WITH SIGNS SHALL BE PAID UNDER THE COMMUNICATION CABLE ITEM.

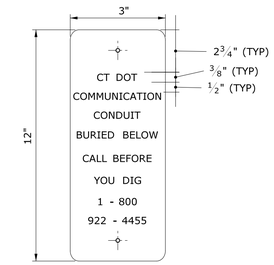

SIGN FACE DETAIL

SIGN # 41-4669

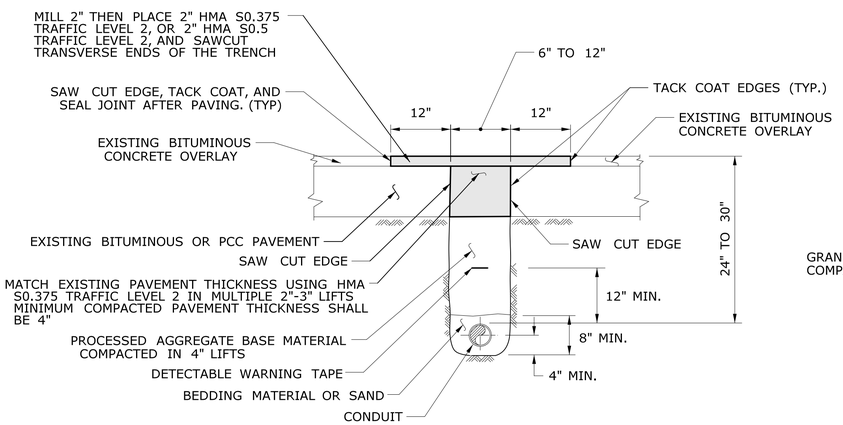

PAVEMENT - BITUMINOUS CONCRETE OR OVERLAYED PORTLAND CEMENT CONCRETE

NOTES:

STANDARD SPECIFICATION, SECTION 3.04 AND STANDARD SPECIFICATION, ARTICLE 4.06.03

1. TOTAL HOT MIX ASPHALT (HMA) THICKNESS TO MATCH EXISTING BITUMINOUS CONCRETE AND PORTLAND CEMENT CONCRETE (PCC) THICKNESS.
2. WHEN ALLOWED BY ENGINEER, USE CONTROLLED LOW STRENGTH MATERIAL (CLSM) AS BEDDING MATERIAL. TOP OF CLSM SHALL BE AT LEAST 20" BELOW SURFACE.

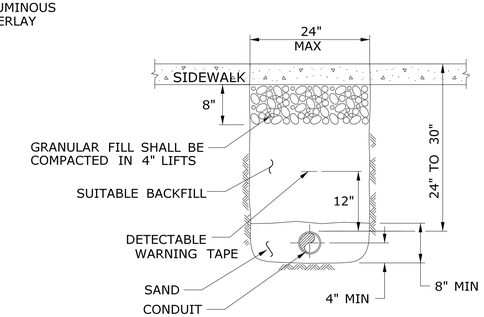

SIDEWALK

NOTES:

STANDARD SPECIFICATIONS, SECTIONS 9.21 & 9.22

1. WHERE CONCRETE SIDEWALK IS DAMAGED OR CUT, REPLACE THE ENTIRE SECTION BETWEEN JOINTS. REPLACEMENT SIDEWALK IS PAID FOR UNDER THE ITEM "CONCRETE SIDEWALK".

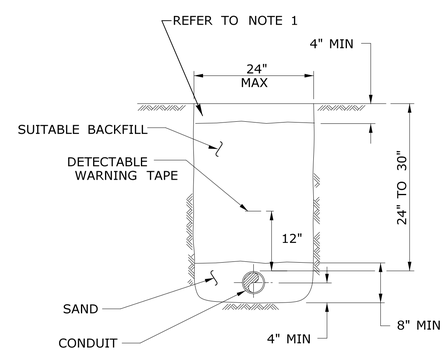

EARTH

NOTES:

STANDARD SPECIFICATIONS, SECTION 9.50 OR SEEDING TYPE CALLED OUT ON THE PLANS.

1. IN MOWED AREAS: PLACE TOPSOIL, FERTILIZER, SEED, & MULCH.

GENERAL NOTES:

1. TOP OF CONDUIT AT LEAST 24" DEEP.
2. COMPACT BACKFILL IN ≤6" LIFTS.
   HAND COMPACTION NOT PERMITTED.

LEGEND AS SHOWN ON TRAFFIC CONTROL SIGNAL PLAN:

– – – – PROPOSED RMC (RIGID METAL CONDUIT)

–•—•— EXISTING RMC (RIGID METAL CONDUIT)

	NOT TO SCALE	SIGNATURE BLOCK: OFFICE OF ENGINEERING 2800 BERLIN TURNPIKE NEWINGTON, CT 06111	SUBMITTED BY: Lisa N. Conroy, P.E. 2024.01.23 08:17:40-05'00'	APPOVED BY: Digitally signed by Matthew C. Blume, P.E., PTOE Date: 2024.02.21 08:26:47-05'00'	STATE OF CONNECTICUT DEPARTMENT OF TRANSPORTATION	CTDOT STANDARD SHEET	STANDARD SHEET TITLE: TRENCHING & BACKFILLING, ELECTRICAL CONDUIT	STANDARD SHEET NO.: TR-1001_01