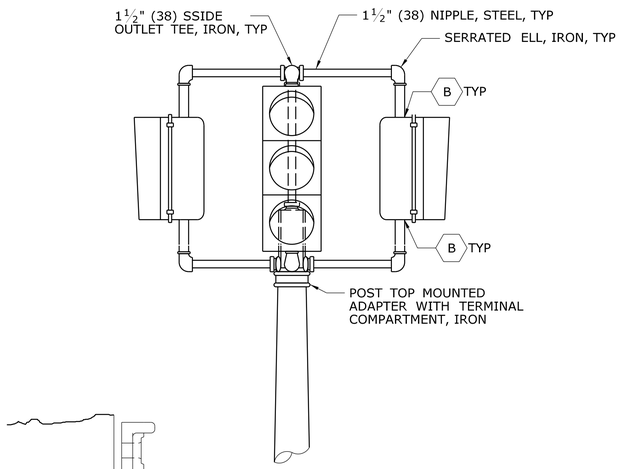

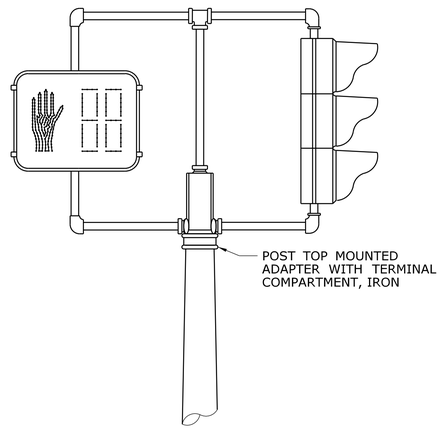

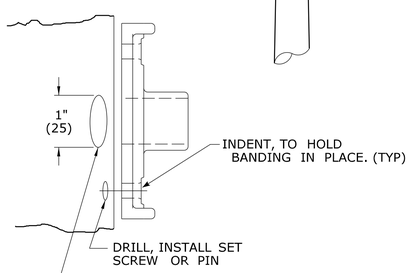

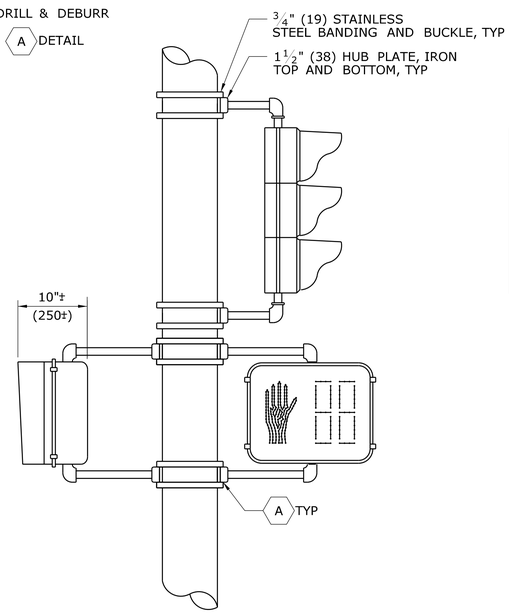

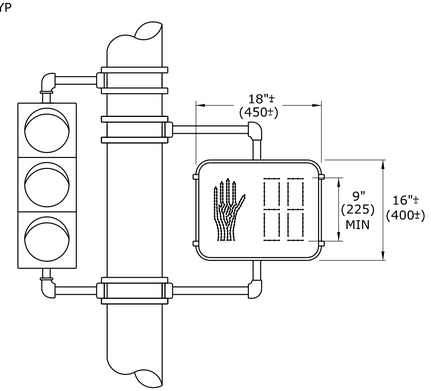

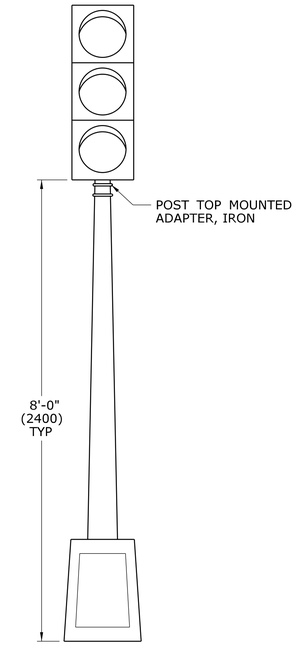

ONE WAY TRAFFIC SIGNAL PEDESTAL MOUNTED

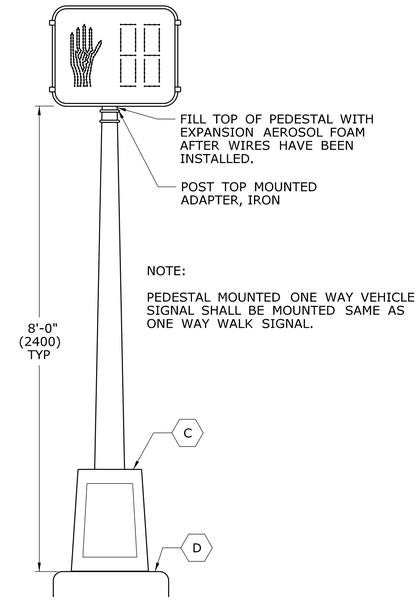

NOTE:

PEDESTAL MOUNTED ONE WAY VEHICLE SIGNAL SHALL BE MOUNTED SAME AS ONE WAY WALK SIGNAL.

ONE WAY WALK SIGNAL PEDESTAL MOUNTED

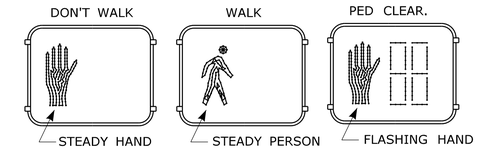

TYPICAL INDICATION WHEN LIT

NON-COUNTDOWN DISPLAY, ONLY WHEN SHOWN ON PLAN.

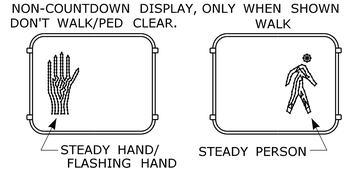

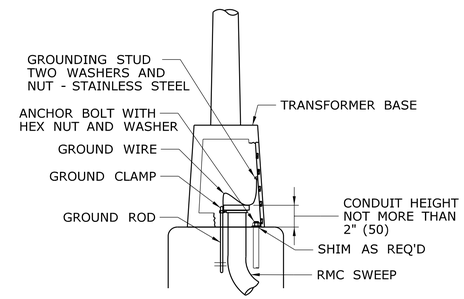

ALUMINUM PEDESTAL INSTALLATION DETAIL

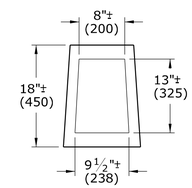

ALUMINUM PEDESTAL DOOR OPENING DETAIL

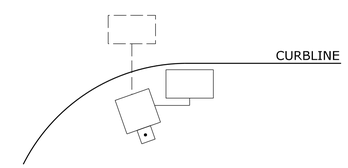

WHEN PEDESTALS OR SPAN POLES ARE INSTALLED CLOSE TO THE CURB, SIDE MOUNT PEDESTRIAN OR TRAFFIC SIGNALS TO AVOID VISOR DAMAGE FROM TURNING VEHICLES.

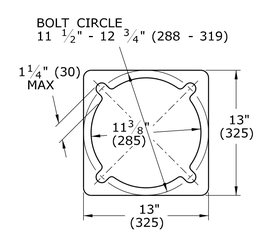

PEDESTAL BASE PLAN

ONE WAY TRAFFIC SIGNAL POLE MOUNTED

NOTES:

A. SECURE LOWER HUB PLATE WITH STAINLESS STEEL SET SCREW OR PIN PRIOR TO BANDING TO PREVENT MOVEMENT. INSTALL CABLE THROUGH BOTTOM OF HUB PLATE.

B. REFER TO CTDOT TRAFFIC STANDARD SHEET, TR-1105_01, TRAFFIC SIGNALS & CABLE ASSIGNMENTS.

C. IF THREADED, MIN 1" (25) THREADED INTO BASE, SECURED WITH STAINLESS STEEL SET SCREWS.

D. BASE DESIGNED AS BREAK-AWAY.

INCANDESCENT WALK SIGNAL LAMPS ARE 67 WATTS, RATED AT 8000 HOURS LAMP LIFE. LED WALK SIGNAL LAMPS ARE MAXIMUM 15 WATTS, WARRANTEED AT 5 YEAR LIFE.

LEGEND AS SHOWN ON TRAFFIC CONTROL SIGNAL PLAN:
- STEEL SPAN POLE, MAST ARM ASSEMBLY SHAFT
- ALUMINM PEDESTAL
- TRAFFIC SIGNAL
- PEDESTRIAN SIGNAL
- PEDESTAL MOUNTED, TRAFFIC & PEDESTRIAN SIGNALS
- POLE MOUNTED, TRAFFIC & PEDESTRIAN SIGNALS

REV.	DATE	REVISION DESCRIPTION
2	4-2012	MINOR REVISIONS.
1	1-2010	INCLUDED COUNTDOWN PEDESTRIAN SIGNALS.

THE INFORMATION, INCLUDING ESTIMATED QUANTITIES OF WORK, SHOWN ON THESE SHEETS IS BASED ON LIMITED INVESTIGATIONS BY THE STATE AND IS IN NO WAY WARRANTED TO INDICATE THE CONDITIONS OF ACTUAL QUANTITIES OF WORK WHICH WILL BE REQUIRED.

Plotted Date: 4/14/2012

DIMENSIONS ARE IN ENGLISH ("') & METRIC UNITS (mm). METRIC DIMENSIONS ARE ROUNDED: - OVER 1" TO NEAREST 5 mm - UNDER 1" TO NEAREST 1 mm.

NOT TO SCALE

STATE OF CONNECTICUT
DEPARTMENT OF TRANSPORTATION

Filename: CTDOT_TRAFFIC_STD.dgn Model: TR-1102_01

SUBMITTED BY: NAME/DATE/TIME: Tracy L. Fogarty 2012.05.01 12:55:27-04'00'

APPROVED BY: NAME/DATE/TIME: Timothy M. Wilson 2012.05.09 10:24:58-04'00'

CTDOT STANDARD SHEET

OFFICE OF ENGINEERING

STANDARD SHEET TITLE: PEDESTALS, PEDESTRIAN SIGNALS

STANDARD SHEET NO.: TR-1102_01