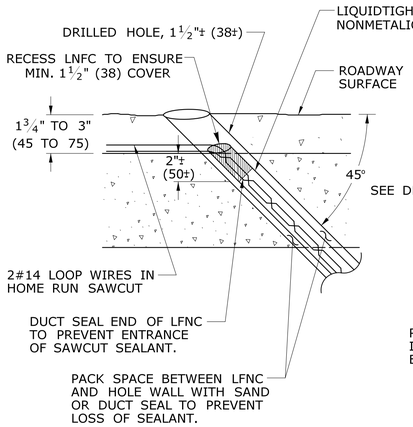

DETAIL "A"

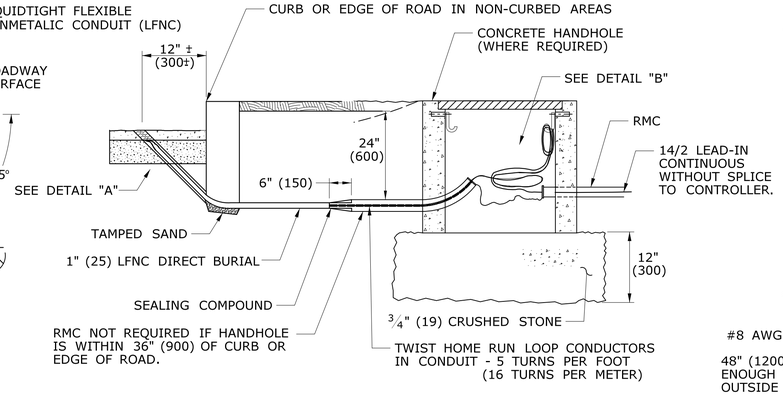

TYPICAL ELEVATION VIEW
LOOP DETECTOR LEAD-IN

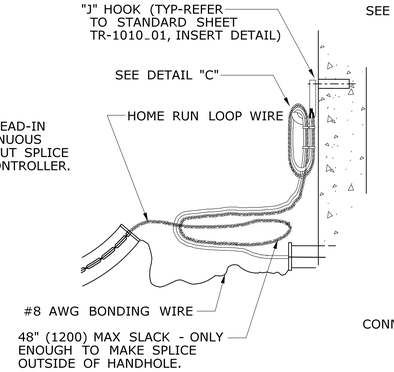

DETAIL "B"

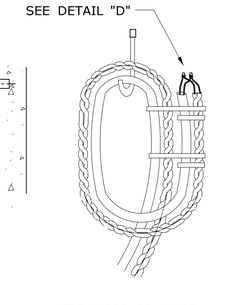

DETAIL "C"
FRONT VIEW

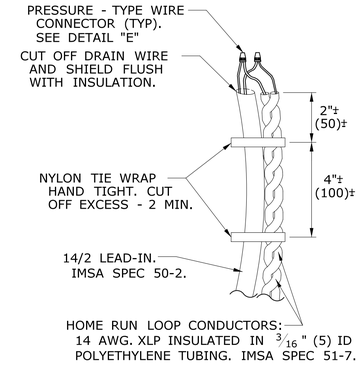

DETAIL "D"

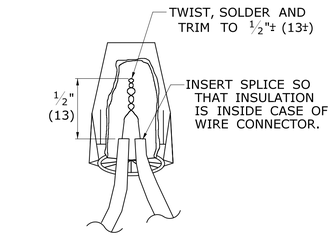

NOTE:

WATER RESISTANT CONNECTOR DESIGNED FOR WET, DAMP AND CORROSIVE APPLICATIONS. ONE TIME USE ONLY. DISCARD ALL REMOVED CONNECTORS.

DETAIL "E"

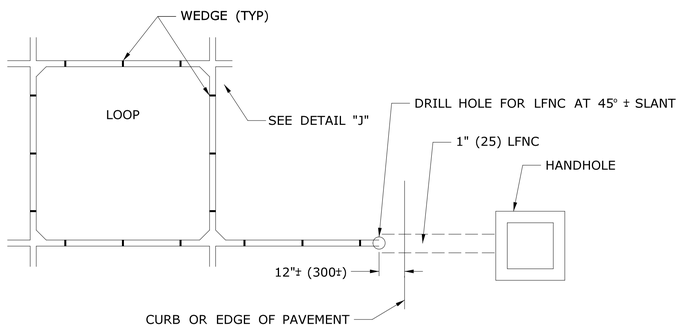

TYPICAL PLAN VIEW
LOOP DETECTOR SAWCUT AND LEAD-IN

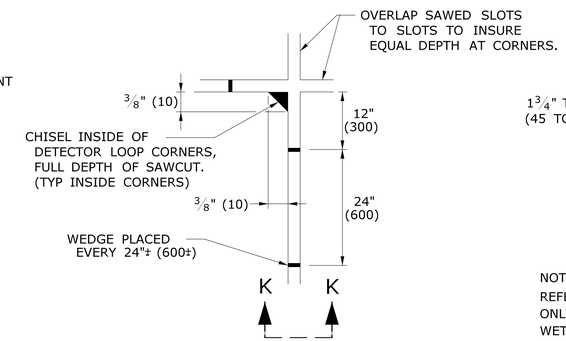

DETAIL "J"

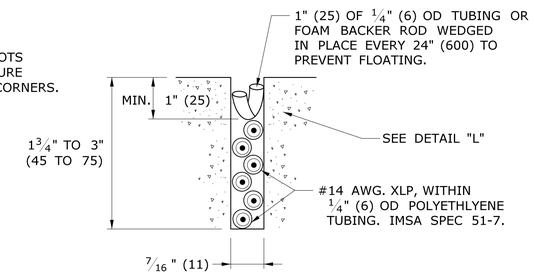

DETAIL "K"

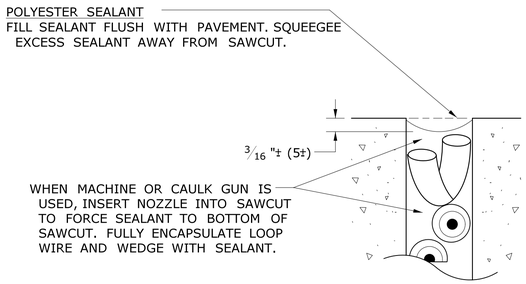

DETAIL "L"

NOTES:

REFER TO STANDARD SPECIFICATIONS, SECTION 11-11.
ONLY USE POLYESTER COMPOUND AS SEALANT, UNLESS OTHER TYPE IS APPROVED BY ENGINEER.
WET SAW CUT ONLY, DRY SAW CUT NOT PERMITTED.
RECOMMENDED SAW BLADE: 14" x ⅜" (350 x 10) PRODUCES 7/16" (11) SLOT.
SAW CUT LOOP & HOME RUN DEPTH TO ENSURE MIN. 1" (25) SEALANT COVERAGE.

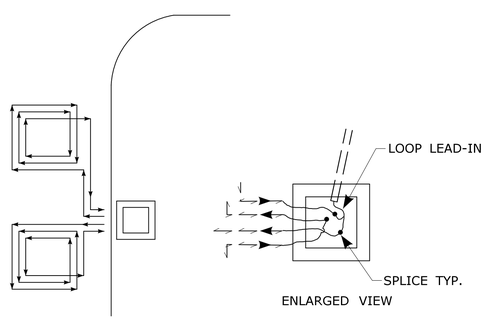

TYPICAL WINDING
SEGMENTED LOOPS, 3 TURNS EACH

TO CREATE A UNIFORM MAGNETIC FIELD, WIND ADJACENT LOOPS IN OPPOSITE DIRECTIONS.

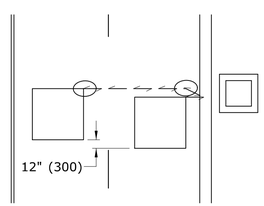

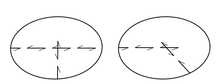

ACCEPTABLE SAW CUT

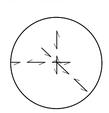

NOT ACCEPTABLE SAW CUT

DO NOT OVERLAP MORE THAN TWO SAWCUTS.

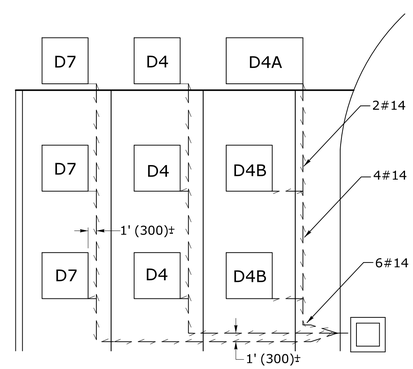

EXAMPLE A

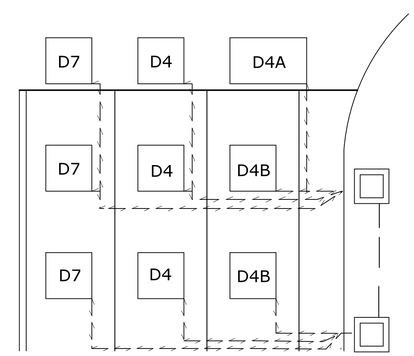

EXAMPLE B

REAR SEGMENTS ALSO USED FOR VOLUME COUNTS

LEGEND AS SHOWN ON TRAFFIC CONTROL SIGNAL PLAN:
- INDUCTIVE LOOP DETECTOR
- SAW CUT
- RIGID METAL CONDUIT
- HANDHOLE

SEE TRAFFIC SIGNAL PLAN FOR ACTUAL LOOP PLACEMENT, NUMBERS, ETC...
LOOP SEGMENTS ON SAME AMPLIFIERS MAY SHARE HOME RUN SAW CUT. SPLICE SEGMENTS IN SERIES.
LOOP SEGMENTS ON DIFFERENT AMPLIFIERS MUST BE IN SEPARATE HOME RUN SAW CUT.

REV.	DATE	REVISION DESCRIPTION
3	4-2014	DETAIL "B" - REVISED "J" HOOK NOTE.
2	7-2012	DELETED URETHANE SEALANT NOTE FROM DETAIL "L"
1	4-2012	MINOR REVISIONS.

THE INFORMATION, INCLUDING ESTIMATED QUANTITIES OF WORK, SHOWN ON THESE SHEETS IS BASED ON LIMITED INVESTIGATIONS BY THE STATE AND IS IN NO WAY WARRANTED TO INDICATE THE CONDITIONS OF ACTUAL QUANTITIES OF WORK WHICH WILL BE REQUIRED.

Plotted Date: 4/21/2014

DIMENSIONS ARE IN ENGLISH ('.") & METRIC UNITS (mm). METRIC DIMENSIONS ARE ROUNDED:
- OVER 1" TO NEAREST 5 mm
- UNDER 1" TO NEAREST 1 mm.

NOT TO SCALE

STATE OF CONNECTICUT
DEPARTMENT OF TRANSPORTATION

Filename: CTDOT_TRAFFIC_STD.DGN Model: TR-1111_01

SUBMITTED BY: NAME/DATE/TIME: Tracy L. Fogarty, P.E. 2014.04.25 16:02:20-04'00'

APPROVED BY: NAME/DATE/TIME: Digitally signed by Charles S. Harlow, P.E. Date: 2014.04.29 14:27:33-04'00'

CTDOT STANDARD SHEET

OFFICE OF ENGINEERING

STANDARD SHEET TITLE:

LOOP VEHICLE DETECTOR AND SAWCUT

STANDARD SHEET NO.:

TR-1111_01