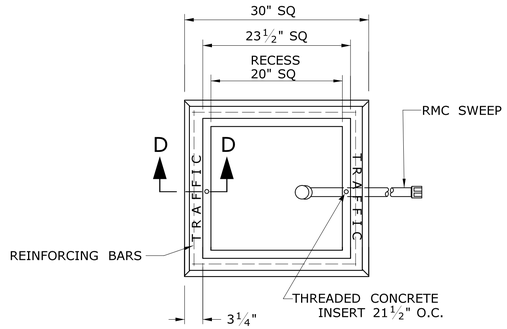

PLAN VIEW

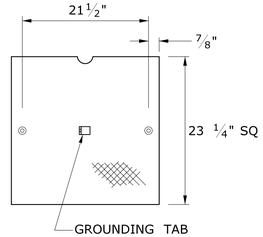

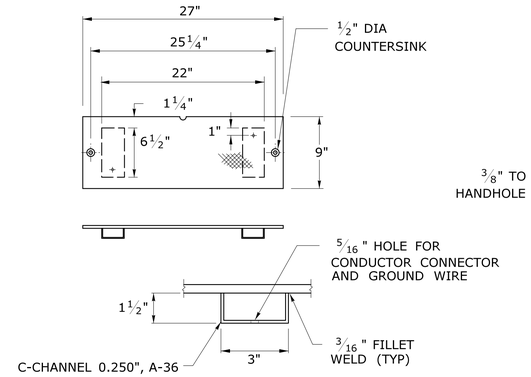

GALVANIZED, NON-SKID 3/8" FLOOR PLATE STEEL HANDHOLE COVERS

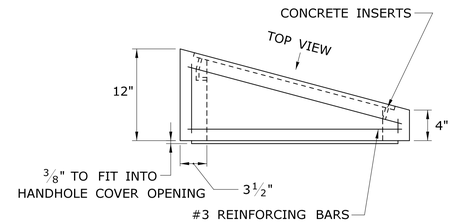

BANK ADAPTER

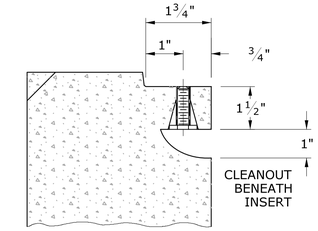

SECTION D-D

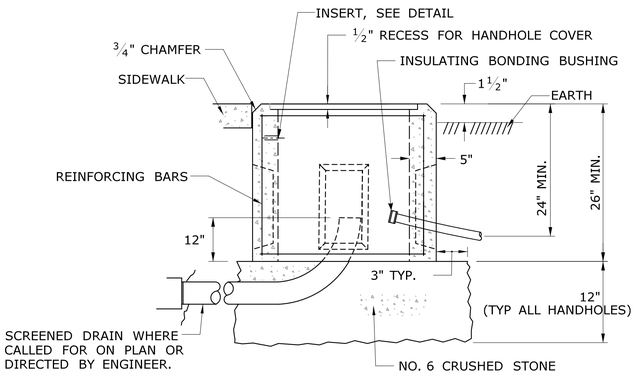

CONCRETE HANDHOLE TYPE I

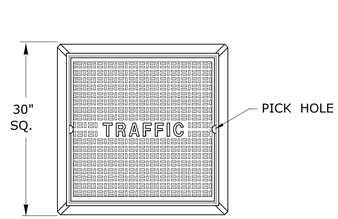

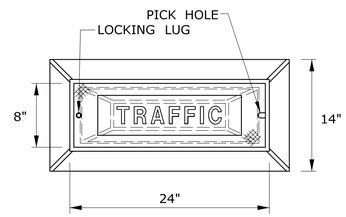

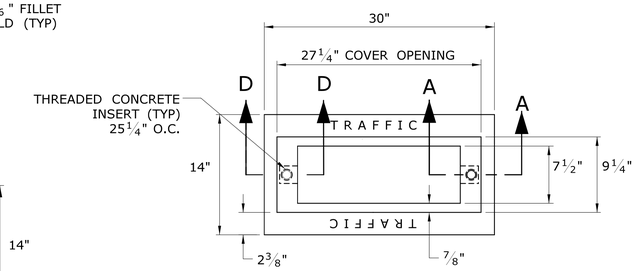

PLAN VIEW

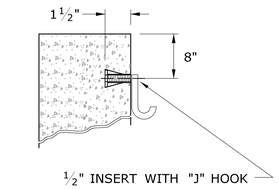

INSERT DETAIL

TYP IN TWO PLACES FOR ALL HANDHOLES

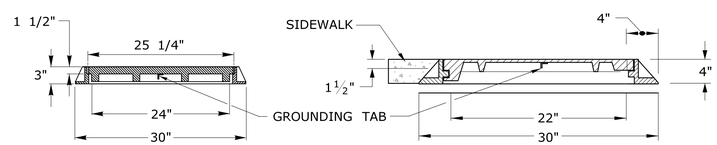

CAST IRON HANDHOLE COVERS

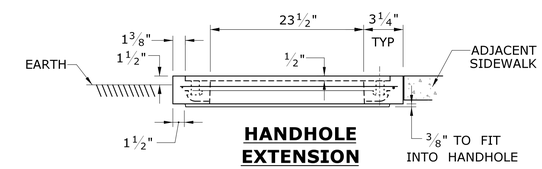

HANDHOLE EXTENSION

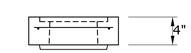

HANDHOLE EXTENSION

SIDE VIEW

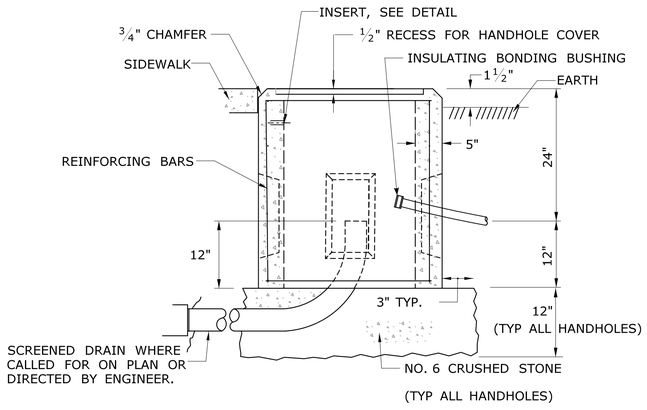

CONCRETE HANDHOLE TYPE I FOR SPLICING INTERCONNECT

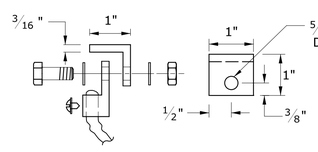

STEEL GROUNDING TAB w/ CONDUCTOR CONNECTOR

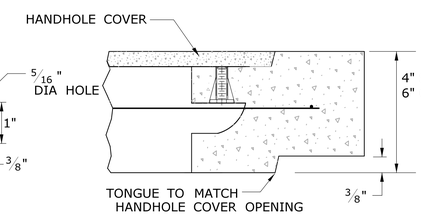

SECTION A-A HANDHOLE EXTENSIONS

4 - #8 REINFORCING BARS REQ'D

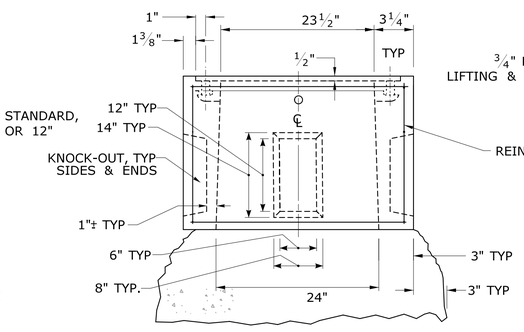

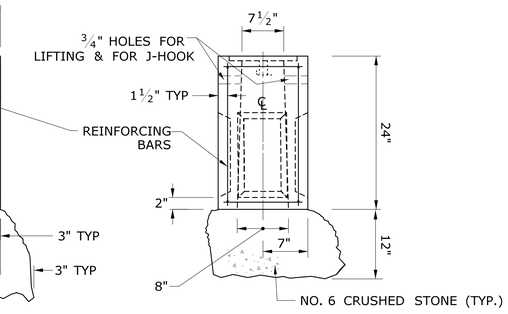

BASE SECTION

CONCRETE HANDHOLE TYPE II

COVER NOTES:

1. GROUNDING TAB WELDED TO BOTTOM CENTER OF COVER WITH 3/16" WELD (3 SIDES).
2. ATTACH 6' LENGTH OF NO. 8 GROUND WIRE TO GROUNDING TAB WITH CONDUCTOR CONNECTOR, ¼" - 20 X ¾" LG STAINLESS STEEL HEX HEAD BOLT, AND STAINLESS STEEL FLAT WASHER. ATTACH FREE END OF GROUND WIRE TO CONDUIT BONDING BUSHING IN HANDHOLE.
3. CONDUCTOR CONNECTOR: COPPER ALLOY BODY, BRASS SCREW, BRASS OR COPPER ALLOY PRESSURE PLATE.
4. COVER SCREW INSERT: ⅜"-16, 1½"L, STAINLESS STEEL.
5. COVER SCREW: ⅜"-16, 1"L, FLAT HEAD, SLOTTED, STAINLESS STEEL.

HANDHOLE NOTES:

1. CONCRETE: (PRECAST) PRC04060 IN ACCORDANCE WITH ARTICLE M.14.01
2. COMPLETE TYPE II HANDHOLE:
   IN EARTH AREAS, CONSISTS OF A BASE SECTION WITH HANDHOLE EXTENSION IF NEEDED, AND STEEL COVER.
   IN SIDEWALK AREAS, CONSISTS OF A BASE SECTION WITH HANDHOLE EXTENSION IF NEEDED, AND CAST IRON COVER PAID UNDER A SEPARATE ITEM.
3. PLAN VIEW DIMENSIONS, SECTION VIEW, & DETAILS, SAME FOR BASE SECTION, EXTENSIONS & BANK ADAPTER.
4. GROUT AROUND ALL CONDUITS.
5. INSTALL 30" SIDE PARALLEL TO ROAD UNLESS OTHERWISE NOTED.
6. INSTALL HANDHOLES APPROX. 12" BEHIND CURB OR IF NO CURB, 24" BEHIND EDGE OF ROAD UNLESS OTHERWISE SPECIFIED.
7. CAST THE WORD "TRAFFIC" INTO TOP EDGE OF HANDHOLE, 1½" LETTERS.
8. WHERE AN EXISTING CONCRETE SIDEWALK SLAB ABUTTING A HANDHOLE IS DAMAGED OR CUT DURING INSTALLATION, REPLACE THE ENTIRE SIDEWALK SECTION.
9. 12-#3 REINFORCING BARS REQUIRED FOR ALL HANDHOLES. (8 HORIZONTAL, 4 VERTICAL)
10. FOR TYPE I INTERCONNECT HANDHOLE 2" RMC ENTERING AND EXITING HANDHOLE MUST BE INSTALLED PERPENDICULAR TO THE SIDEWALL OF THE HANDHOLE.
11. CONTRACTOR SHALL BE RESPONSIBLE TO ENSURE THAT THE RADIUS OF THE INSTALLED RMC IS NOT GREATER THAN THE MINIMUM ALLOWED FOR FIBER OPTIC CABLE.

LEGEND AS SHOWN ON TRAFFIC CONTROL SIGNAL PLAN:

- PROPOSED HANDHOLE
- EXISTING HANDHOLE

NOT TO SCALE

SIGNATURE BLOCK:
OFFICE OF ENGINEERING
2800 BERLIN TURNPIKE
NEWINGTON, CT 06111

SUBMITTED BY:
Lisa N. Conroy, P.E.
2024.01.23
08:19:13-05'00'

APPOVED BY:
Digitally signed by Matthew C. Blume, P.E., PTOE
Date: 2024.02.21
08:26:02-05'00'

STATE OF CONNECTICUT
DEPARTMENT OF TRANSPORTATION

CTDOT STANDARD SHEET

STANDARD SHEET TITLE:
CONCRETE HANDHOLE

STANDARD SHEET NO.:
TR-1010_01