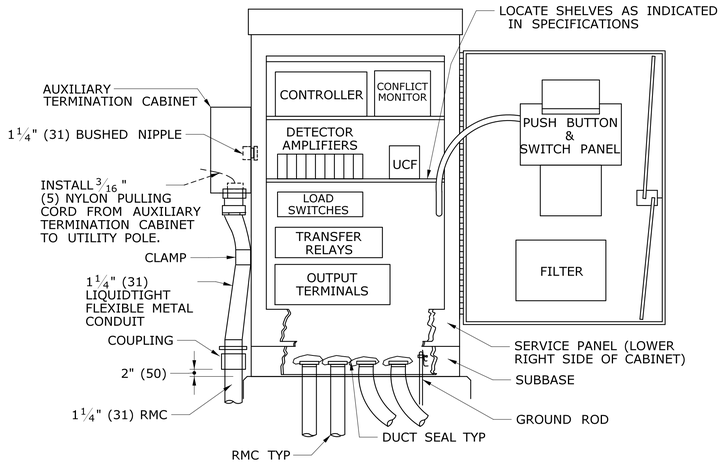

PROVIDE A MINIMUM CLEARANCE OF 6" (150) FROM THE CABINET BASE TO ALL COMPONENTS AND TERMINALS.

TYPICAL BASE MOUNTED CONTROLLER ON TYPE IV FOUNDATION

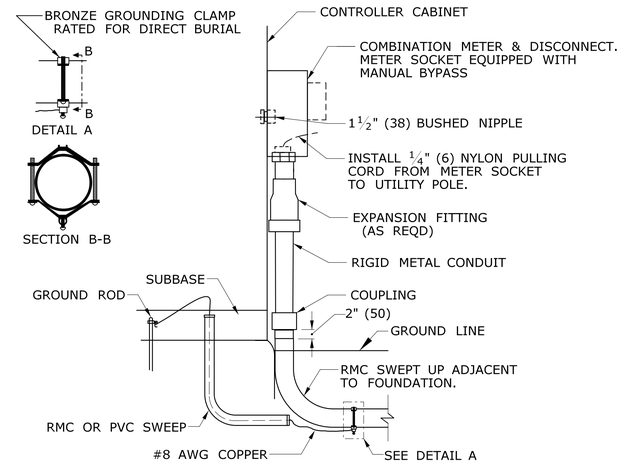

CONTROLLER CABINET WITH METERED SERVICE

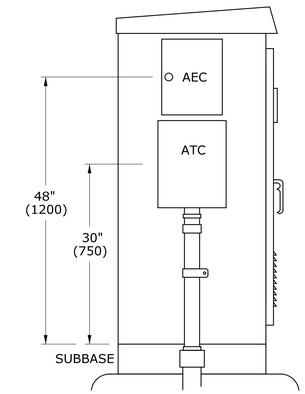

AUXILIARY EQUIPMENT CABINET (AEC) AUXILIARY TERMINATION CABINET (ATC)

CABINET TYPE	HEIGHT	WIDTH	DEPTH
ATC	16"(400)	12"(300)	6"(150)
AEC	14"(350)	11"(275)	11"(275)

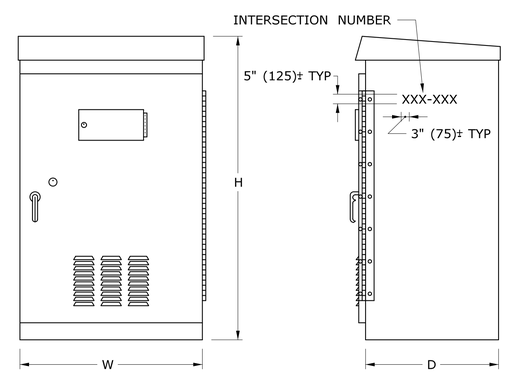

BASE MOUNTED TRAFFIC CONTROLLER (TYPE B, D & E)

CABINET TYPE	DEPTH		WIDTH		HEIGHT	
	MIN	MAX	MIN	MAX	MIN	MAX
B	17" (425)	19" (475)	30" (750)	34" (850)	52" (1300)	56" (1400)
D	25" (625)	27" (675)	42" (1050)	45" (1125)	54" (1350)	59" (1475)
E	17" (425)	19" (475)	30" (750)	32" (800)	49" (1225)	52" (1300)

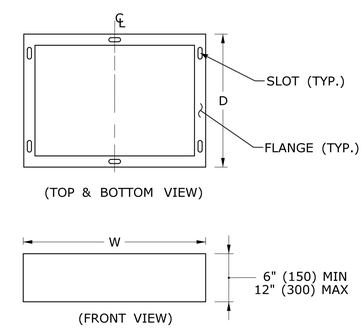

SUBBASE

SLOT AND FLANGE DIMENSIONS TO BE PER MANUFACTURER.

GENERAL NOTES:

GROUT ALL BASES AFTER MOUNTING ON FOUNDATIONS, WHERE NECESSARY.
3'-0" (900) FROM SIDEWALK TO BOTTOM OF CONTROLLER.
INSTALL PEDESTALS AND POLES SO THAT DOORS AND COVERS ARE ON THE SIDE AWAY FROM THE STREET, UNLESS OTHERWISE SPECIFIED.
INSTALL CABINET SO THAT DOOR OPENS FIELD SIDE UNLESS OTHERWISE NOTED ON PLANS.
CAULK SEAM BETWEEN SUBBASE AND FOUNDATION.
STENCIL SIX DIGIT INTERSECTION NUMBER, USING BLACK PAINT ON SIDE, FRONT OR BACK OF CABINET MOST VISIBLE FROM THE ROAD.

LEGEND AS SHOWN ON TRAFFIC CONTROL SIGNAL PLAN:
- CONTROLLER ASSEMBLY
- AUXILIARY EQUIPMENT CABINET
- AUXILIARY TERMINTION CABINET

REV.	DATE	REVISION DESCRIPTION
2	5-2013	REVISED SUBBASE.
1	4-2012	REVISED CABINET TYPES & MINOR REVISIONS.

THE INFORMATION, INCLUDING ESTIMATED QUANTITIES OF WORK, SHOWN ON THESE SHEETS IS BASED ON LIMITED INVESTIGATIONS BY THE STATE AND IS IN NO WAY WARRANTED TO INDICATE THE CONDITIONS OF ACTUAL QUANTITIES OF WORK WHICH WILL BE REQUIRED.

Plotted Date: 5/15/2013

DIMENSIONS ARE IN ENGLISH ('.') & METRIC UNITS (mm).
METRIC DIMENSIONS ARE ROUNDED:
- OVER 1" TO NEAREST 5 mm
- UNDER 1" TO NEAREST 1 mm.

NOT TO SCALE

STATE OF CONNECTICUT
DEPARTMENT OF TRANSPORTATION

Filename: CTDOT_TRAFFIC_STD.dgn Model: TR-1108_01

SUBMITTED BY: NAME/DATE/TIME: Tracy L. Fogarty 2013.07.29 14:04:24-04'00'
APPROVED BY: NAME/DATE/TIME: Charles S. Harlow 2013.07.29 14:59:45-04'00'

CTDOT STANDARD SHEET

OFFICE OF ENGINEERING

STANDARD SHEET TITLE: CONTROLLERS

STANDARD SHEET NO.: TR-1108_01