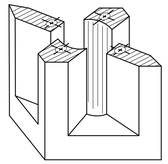

PICTORIAL
SECTION A-A

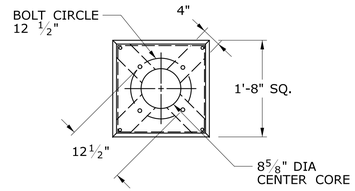

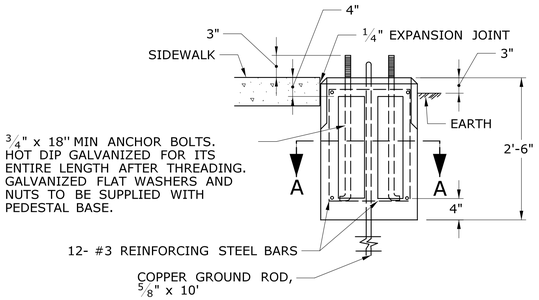

TRAFFIC CONTROL FOUNDATION
PEDESTAL - TYPE I - PRECAST

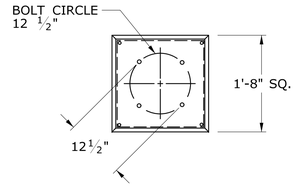

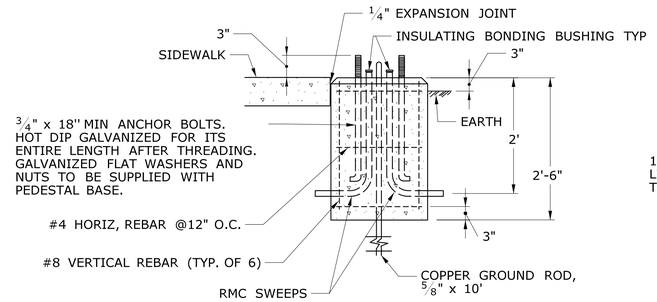

TRAFFIC CONTROL FOUNDATION
PEDESTAL - TYPE I - CAST IN PLACE

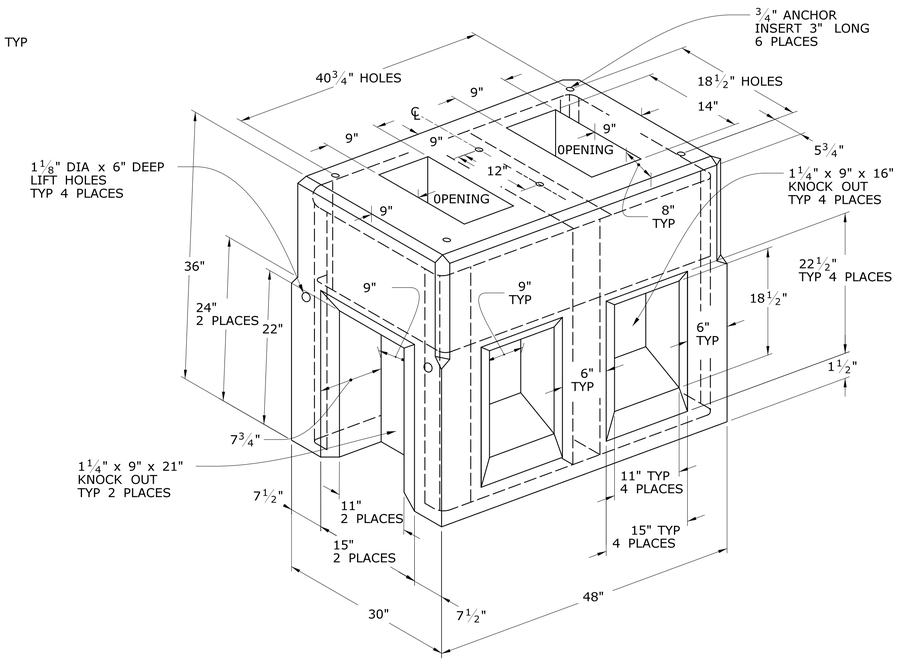

TRAFFIC CONTROL FOUNDATION
CONTROLLER - TYPE IV - PRECAST

TRAFFFIC CONTROL FOUNDATION PEDESTAL TYPE I NOTES:

INSTALL FOUNDATION ON 12" OF COMPACTED GRANULAR FILL IN ACCORDANCE WITH SECTION 2.13
LEVEL FOUNDATION WITH A PROJECTION OF 3" ABOVE FINISHED GRADE.
INSTALL COPPER GROUND ROD: 5/8" X 10'
PLACE NO. 6 CRUSHED STONE IN THE CENTER OPENINGS AFTER THE CONDUITS AND GROUND ROD HAVE BEEN INSTALLED.
CONDUITS SHALL NOT PROJECT MORE THAN 2" ABOVE FOUNDATION.
CONCRETE: (CAST-IN PLACE) PCC04460 IN ACCORDANCE WITH SECTION M.03
CONCRETE: (PRECAST) PRC04060 IN ACCORDANCE WITH ARTICLE M.14.01

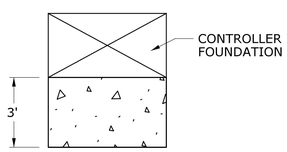

INSTALL PRECAST OR CAST IN PLACE CONCRETE SIDEWALK ON CABINET DOOR SIDE OF CONTROLLER FOUNDATION.
PITCH SIDEWALK 1/4" PER FOOT AWAY FROM THE CONTROLLER FOUNDATION.
REFER TO HIGHWAY STANDARD SHEET HW-921_01 FOR SIDEWALK CONSTRUCTION.

TYPICAL CONCRETE SIDEWALK
AT CONTROLLER FOUNDATION

NOT TO SCALE

TRAFFFIC CONTROL FOUNDATION CONTROLLER TYPE IV NOTES:

INSTALL FOUNDATION ON 12" OF COMPACTED GRANULAR FILL IN ACCORDANCE WITH SECTION 2.13
LEVEL FOUNDATION WITH A PROJECTION OF 4" ABOVE FINISHED GRADE.
INSTALL COPPER GROUND ROD: 5/8" x 10'
PLACE NO. 6 CRUSHED STONE IN THE CENTER OPENINGS AFTER THE CONDUITS AND GROUND ROD HAVE BEEN INSTALLED. THE OPENINGS SHALL BE CAPPED WITH A 2" GROUT LEVEL WITH THE TOP OF THE FOUNDATION AND NEATLY FINISHED. THE GROUT SHALL CONFORM WITH THE REQUIREMENTS OF ARTICLE M.03.05.
#4 REBAR 2" MIN COVER AROUND ALL OPENINGS, 3-#4 REBARS IN ALL CORNERS.
CONDUITS SHALL NOT PROJECT MORE THAN 2" ABOVE FOUNDATION.
CONCRETE: (PRECAST) PRC04060 IN ACCORDANCE WITH ARTICLE M.14.01

LEGEND AS SHOWN ON TRAFFIC CONTROL SIGNAL PLAN:
- PROPOSED CONTROLLER
- EXISTING CONTROLLER
- PEDESTAL MOUNTING

	NOT TO SCALE	SIGNATURE BLOCK: OFFICE OF ENGINEERING 2800 BERLIN TURNPIKE NEWINGTON, CT 06111	SUBMITTED BY: Lisa N. Conroy, P.E. 2024.01.23 08:18:30-05'00'	APPOVED BY: Digitally signed by Matthew C. Blume, P.E., PTOE Date: 2024.02.21 08:15:37-05'00'	STATE OF CONNECTICUT DEPARTMENT OF TRANSPORTATION	CTDOT STANDARD SHEET	STANDARD SHEET TITLE: TRAFFIC CONTROL FOUNDATIONS	STANDARD SHEET NO.: TR-1002_01