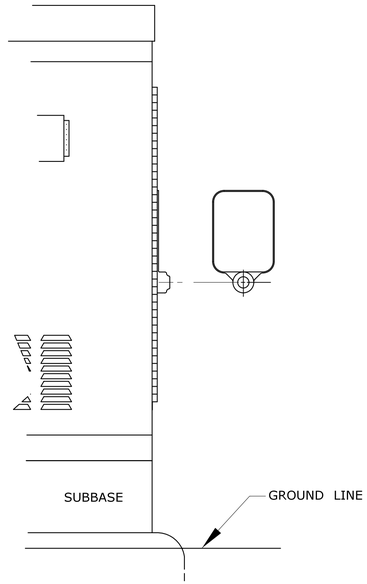

SURFACE MOUNTED

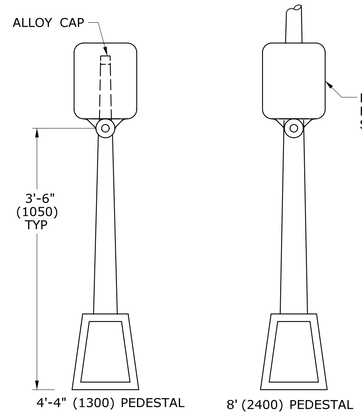

PEDESTAL MOUNTED

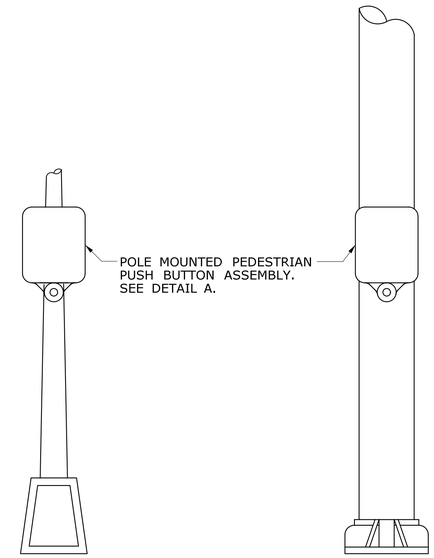

SPAN POLE/MAST ARM MOUNTED

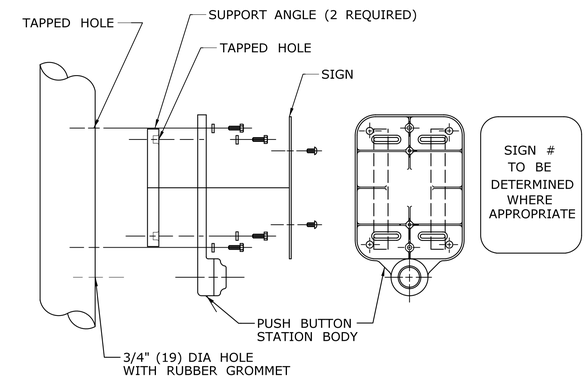

DETAIL A

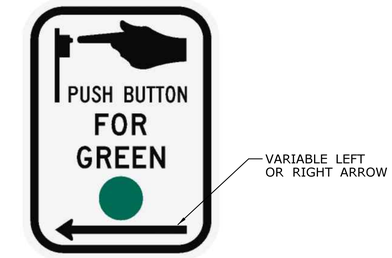

SIGN # 31-0833
USE APPROPRIATE LEFT OR RIGHT ARROW

SIGN # 31-0835

FOR CROSSING WITH SIDE STREET GREEN

GENERAL NOTES:

3'-6" (1050) FROM FINISHED GRADE SUCH AS SIDEWALK TO CENTER OF PUSH BUTTON.
PUSH BUTTON INSTALLATIONS SHALL CONFORM TO THE REQUIREMENTS OF THE AMERICANS WITH DISABILITIES ACT (ADA) STANDARDS FOR ACCESSIBLE DESIGN, CURRENT EDITION GOVERNS.
4'-4" (1300) PEDESTAL TO INCLUDE ALLOY CAP SECURED WITH STAINLESS STEEL SET SCREW.

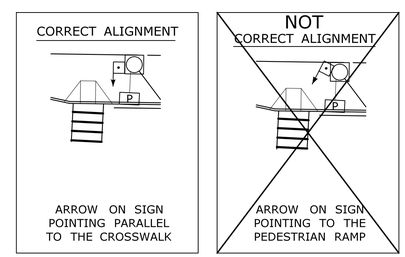

PEDESTRIAN PUSH BUTTON ALIGNMENT

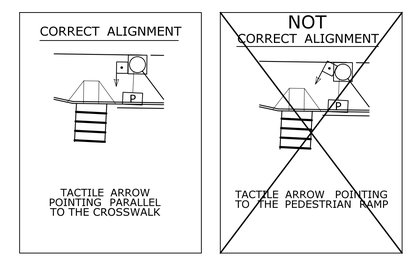

ACCESSIBLE PEDESTRIAN SIGNAL AND DETECTOR

EXAMPLE ALIGNMENTS FOR EXCLUSIVE PEDESTRIAN PHASE

* USE APPROPRIATE ARROW UNLESS OTHERWISE NOTED ON PLAN.

FOR NEW PUSHBUTTON HOUSING, USE 9" x 15" SIGN NO. 31-0856.

FOR EXISTING PUSHBUTTON HOUSING, WITH 9" x 12" SIZE, USE SIGN NO. 31-0845.

LEGEND AS SHOWN ON TRAFFIC CONTROL SIGNAL PLAN:
- PEDESTRIAN PUSH BUTTON
- PEDESTRIAN PUSH BUTTON, PEDESTAL MOUNTED
- PEDESTRIAN PUSH BUTTON, POLE MOUNTED

REV.	DATE	REVISION DESCRIPTION
3	8-2018	UPDATED PEDESTRIAN SIGN LEGENDS AND NOTES.
2	4-2014	ADDED PEDESTRIAN EXAMPLE ALIGNMENTS
1	4-2012	MINOR REVISIONS & UPDATED SIGN #31-0845.

THE INFORMATION, INCLUDING ESTIMATED QUANTITIES OF WORK, SHOWN ON THESE SHEETS IS BASED ON LIMITED INVESTIGATIONS BY THE STATE AND IS IN NO WAY WARRANTED TO INDICATE THE CONDITIONS OF ACTUAL QUANTITIES OF WORK WHICH WILL BE REQUIRED.

Plotted Date: 8/9/2018

DIMENSIONS ARE IN ENGLISH ('.') & METRIC UNITS (mm).
METRIC DIMENSIONS ARE ROUNDED:
- OVER 1" TO NEAREST 5 mm
- UNDER 1" TO NEAREST 1 mm.

NOT TO SCALE

STATE OF CONNECTICUT
DEPARTMENT OF TRANSPORTATION

Filename: CTDOT_TRAFFIC_STD_2018-01-25.dgn Model: TR-1107_01

SUBMITTED BY: NAME/DATE/TIME: Tracy L. Fogarty, P.E. 2018.08.16 12:13:35-04'00'

APPROVED BY: NAME/DATE/TIME: Mark F. Carlino, P.E. 2018.08.21 07:46:57-04'00'

CTDOT STANDARD SHEET

OFFICE OF ENGINEERING

STANDARD SHEET TITLE: **PEDESTRIAN PUSH BUTTONS**

STANDARD SHEET NO.: **TR-1107_01**