TYPICAL RAILROAD GRADE CROSSING DETAIL (LANE WIDTH ≥ 10')

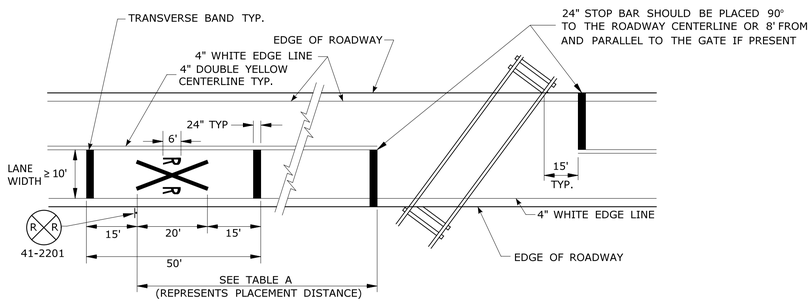

TYPICAL RAILROAD GRADE CROSSING DETAIL (LANE WIDTH < 10')

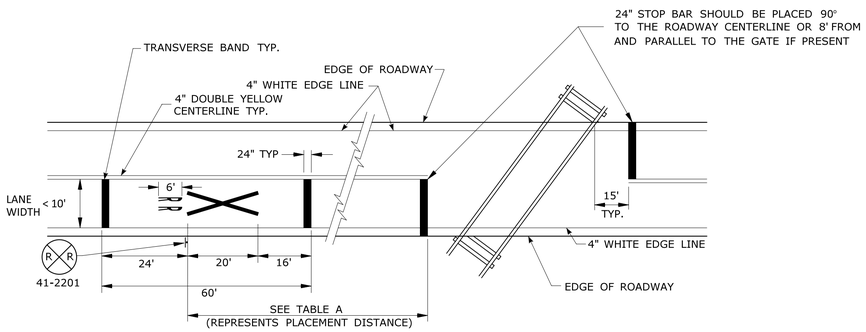

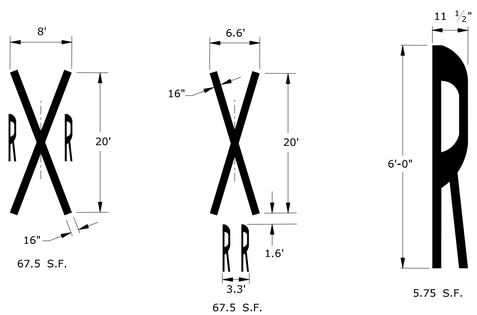

TABLE A	
POSTED OR 85 PERCENTILE SPEED M.P.H.	MINIMUM DISTANCE FT.
20	100
25	100
30	100
35	100
40	125
45	175
50	250
55	325
60	400
65	475

NOTES:

GENERAL:

1. AREA OF PAVEMENT MARKING SYMBOLS AS INDICATED IS APPROXIMATE.
2. REFER TO STANDARD SHEET TR-1210_04 FOR PAVEMENT MARKING LINE DETAILS.

RAILROAD GRADE CROSSINGS:

3. RAILROAD MARKINGS SHALL BE WHITE.
4. ON MULTI-LANE ROADS THE TRANSVERSE BANDS SHOULD EXTEND ACROSS THE APPROACH LANES AND INDIVIDUAL R X R SYMBOLS SHOULD BE USED IN EACH APPROACH LANE.

PARKING STALLS:

5. AUTOMOBILE ACCESSIBLE PARKING SPACES SHALL BE 15' WIDE INCLUDING 5' OF CROSSHATCH.
6. VAN ACCESSIBLE PARKING SPACES SHALL BE 16' WIDE INCLUDING 8' OF CROSSHATCH.
7. ACCESS AISLES FOR ANGLED VAN PARKING SPACES SHALL BE LOCATED ON THE PASSENGER SIDE OF THE PARKING SPACE.
8. CROSS HATCHED ACCESS AISLES SHALL NOT BE SHARED BETWEEN PARKING SPACES.

TYPICAL LONGITUDINAL SPACING

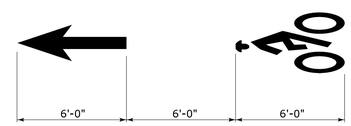

BICYCLE LANE SYMBOL MARKINGS

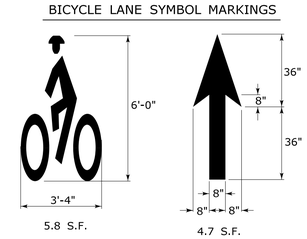

SHARED LANE SYMBOL MARKING

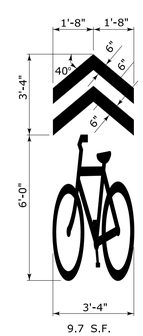

BICYCLE DETECTOR SYMBOL MARKING

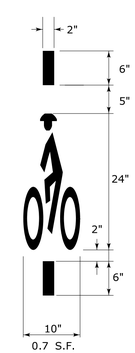

TYPICAL PERPENDICULAR PARKING STALLS DETAIL

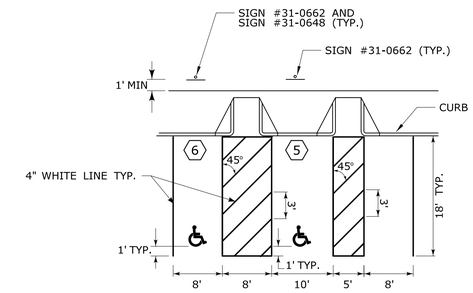

TYPICAL ANGLE PARKING STALLS DETAIL

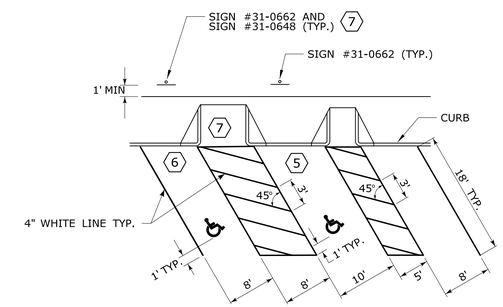

ACCESSIBLE PARKING SPACE SYMBOL

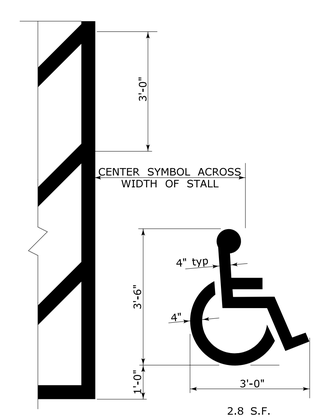

REV.	DATE	REVISION DESCRIPTION

THE INFORMATION, INCLUDING ESTIMATED QUANTITIES OF WORK, SHOWN ON THESE SHEETS IS BASED ON LIMITED INVESTIGATIONS BY THE STATE AND IS IN NO WAY WARRANTED TO INDICATE THE CONDITIONS OF ACTUAL QUANTITIES OF WORK WHICH WILL BE REQUIRED.

Plotted Date: 4/3/2017

NOT TO SCALE

STATE OF CONNECTICUT
DEPARTMENT OF TRANSPORTATION

Filename: TR-1210_09.dgn Model: CT_Civil_2D_Sheet

SUBMITTED BY: NAME/DATE/TIME:
Mark F. Makuch, P.E. 2017.04.19 11:17:36-04'00'

APPROVED BY: NAME/DATE/TIME:
Gregory M. Dorosh, P.E. 2017.04.20 13:26:20-04'00'

CTDOT STANDARD SHEET

OFFICE OF ENGINEERING

STANDARD SHEET TITLE:
PAVEMENT MARKINGS FOR BICYCLE LANES, PARKING STALLS, AND RAILROAD GRADE CROSSINGS

STANDARD SHEET NO.:
TR-1210_09